Frontier POWER PRODUCTS

Kubota

PowerLine GENERATORS

STAMFORD

www.frontierpower.com

KS1000-T4

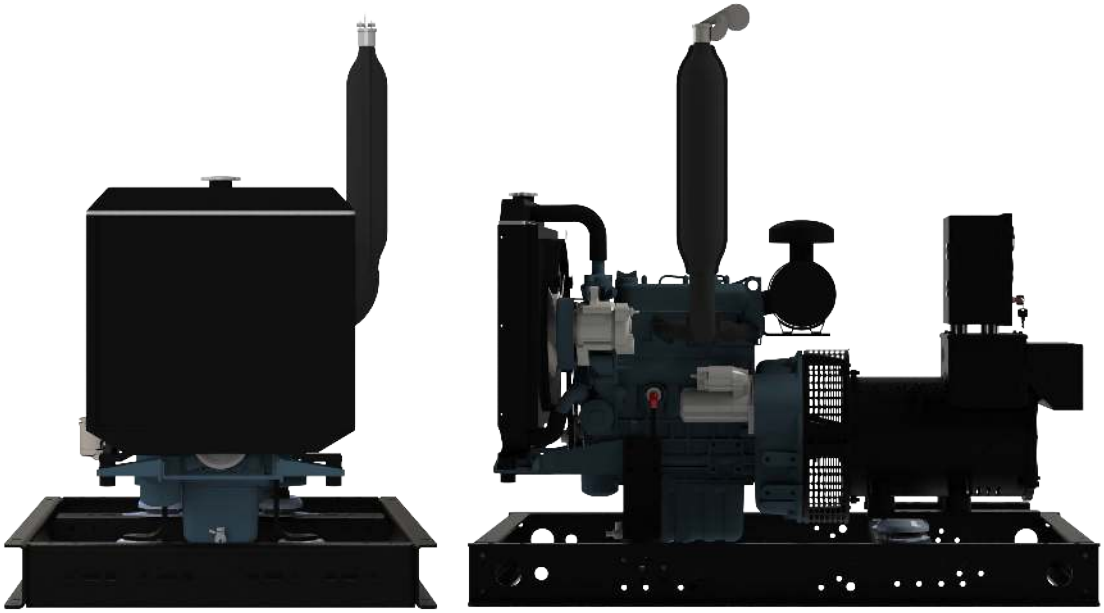

ENGINE

Manufacturer	Kubota
Model	D1305-E4BG1-SAE-2
Output, inter.	13.1 kWm (17.6 HP)
Output, cont.	11.6 kWm (15.6 HP)
Cylinders	Three
Bore X Stroke	78 mm X 88 mm 3.07" X 3.46"
Displacement	1.261 L (76.95 in^3)
Compression ratio	24.0:1
Engine weight (dry)	112 kg (247 lb)

Refer to engine performance curve for more information.

A.C. ALTERNATOR

Manufacturer	Newage/Stamford
Model	S0L1-S / S0L1-P
Control system	Self excited
Voltage Regulation	AS540 +/-1%
Rated power factor	1.0 / 0.8
Winding Leads	4 / 12
Frequency	60 Hz
Temp. Rise	105C/40C
Alternator weight	91.5 kg (201.8 lb)

Refer to alternator spec sheet for more information.

GENERATOR SET SPECIFICATIONS

Model	KS1000-T4
Estimated genset weight	278kg (613 lb)
Prime rating	9.8 / 11.1 kWe
Standby rating	10.0 / 11.3 kWe
Voltages*	120/208/240V
Operating speed	1800 rpm
Phase	Single / Three

*Alternative voltages available.

Refer to Frontier Power Products for more information.

STANDARD CONTROLS

- Standard mechanical panel with oil pressure, coolant temp and hour meter gauges. Panel has key start with glow plug indicator and Murphy safety relay.
- Panel mounted facing rear on top of alternator.
- Electric fuel transfer and priming pump (12VDC).
- Battery rack and cables optional. Supplied battery optional.
- 12 VDC starting system.

Specifications are subject to change without notice and should be used as a reference only

DIMENSIONAL DRAWING

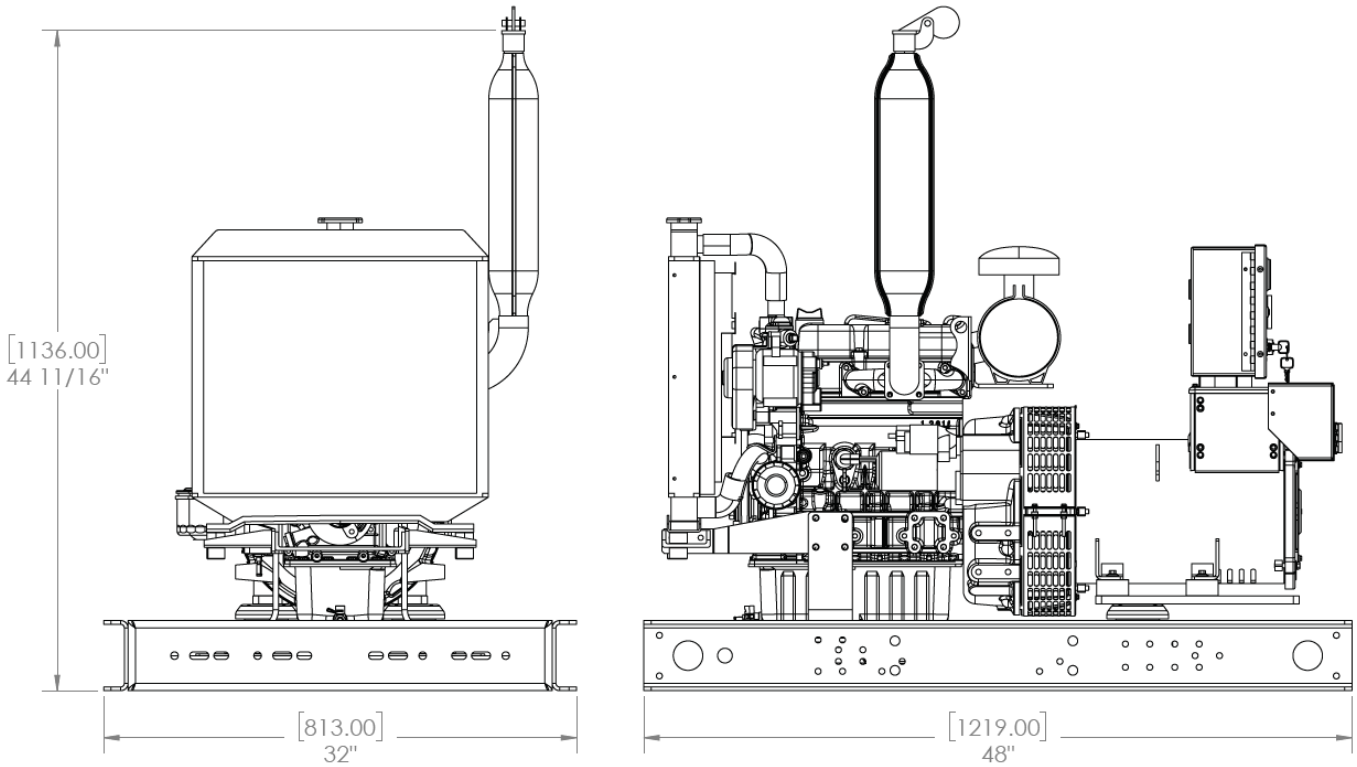

Dimensions subject to change without notice
Dimensions are in format in [mm]

STANDARD ACCESSORIES/ NOTES

- Standard sheet metal frame bolted assembly with four captive vibration isolator mounts.
- Control panel mounted on rear of unit.
- Unit may require derate dependent on ambient conditions such as >40C or >300m altitude.

CUSTOMIZATIONS

- Fuel tank sub-frame.
- Long Run Oil System™ Package
- Standard and custom enclosures .
- Transport Canada approved trailer base.
- Custom electrical distribution.
- Remote diagnostics and communication.
- Remote control panel mounting.
- Alternative output ratings, voltages and frequencies available (dependent on engine).

Delta, BC:
(604) 946-5531
TOLL-FREE: 1 877 946-5531

Calgary, AB
(403) 720-3735
TOLL-FREE: 1 877 720-3735

Edmonton, AB
(780) 455-2260
TOLL-FREE: 1 877 455-2260

Winnipeg, MB
(204) 949-1526
TOLL-FREE: 1 877 949-1526